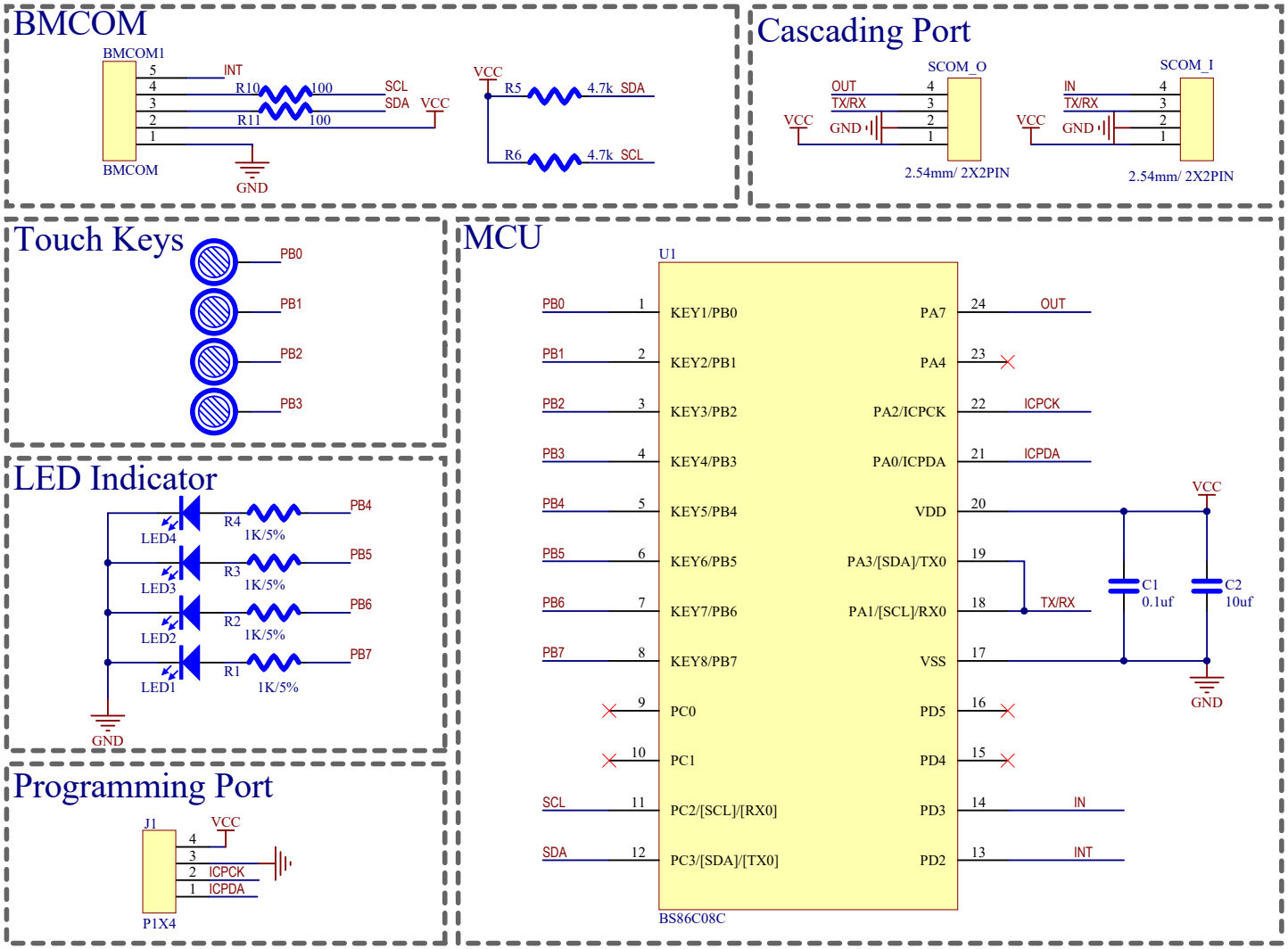

Title:	BMK52M134	BEST MODULES
Design by:	BESTMODULES TEAM	
Data:	2023/5/22	
Rev:	V1.0	Sheet: 1 / 1