LED Matrix

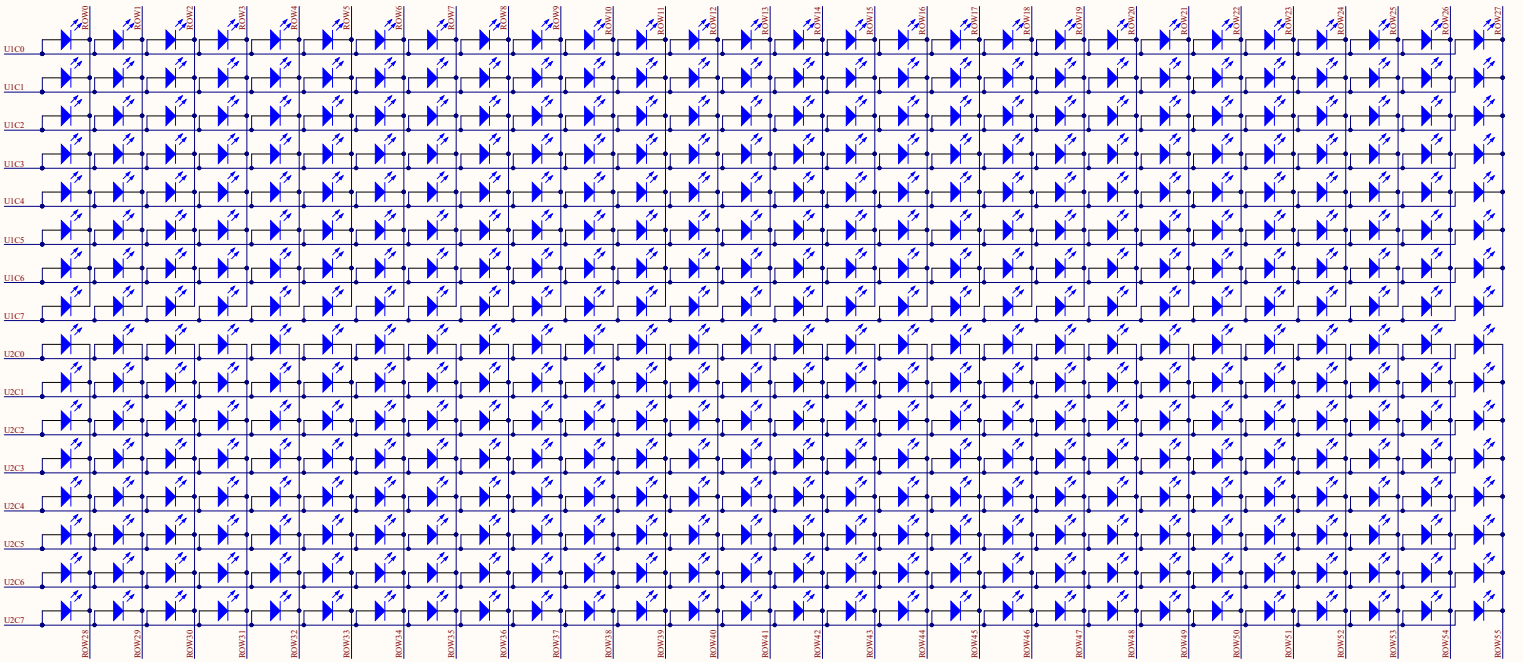

LED Driver

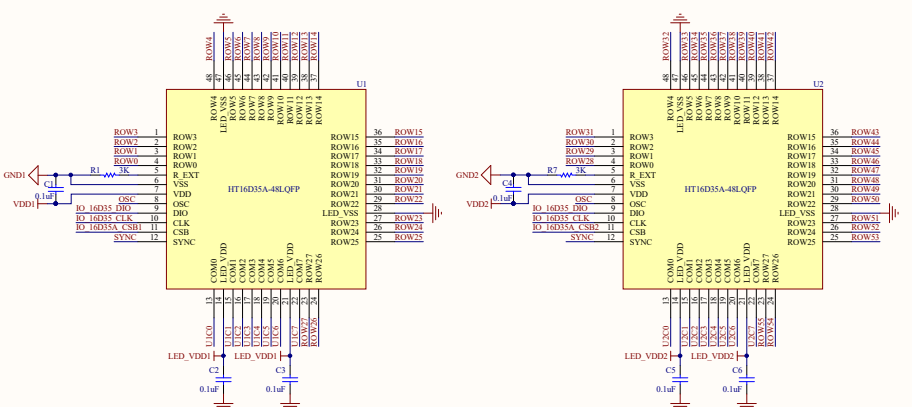
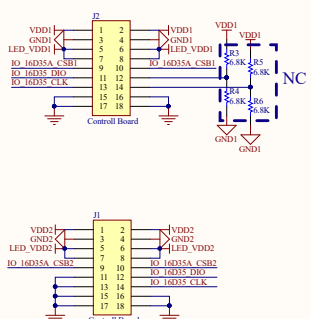
Connector