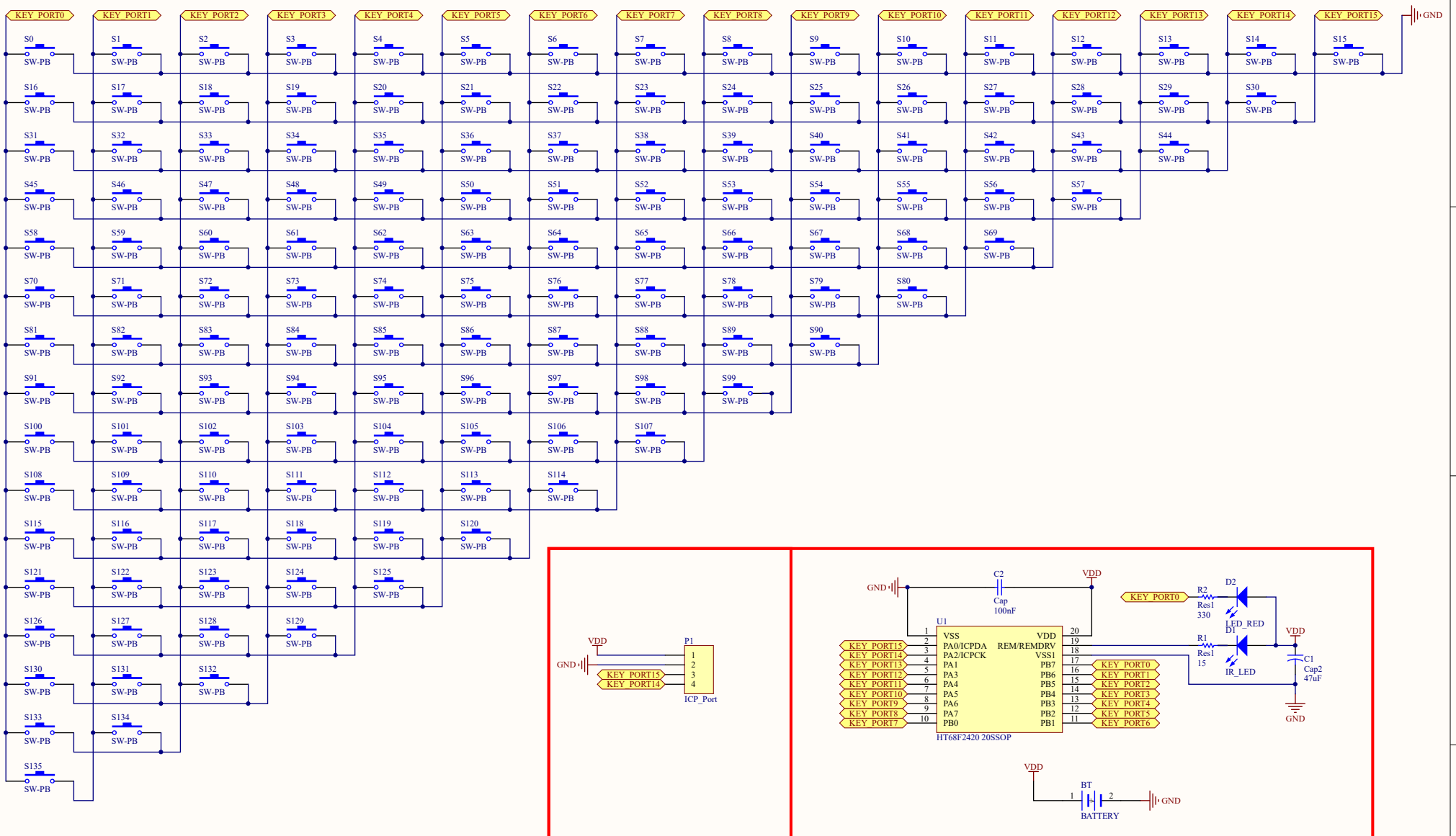

Title	ESK-IRRC-T00		
Size A3	Number		Revision V2.00
Date: 2021/6/15		Sheet	of
File: H:\IR Remote Controller Workshop\...\ESK-IRRC-T00 PCBV2.0.SchDoc			