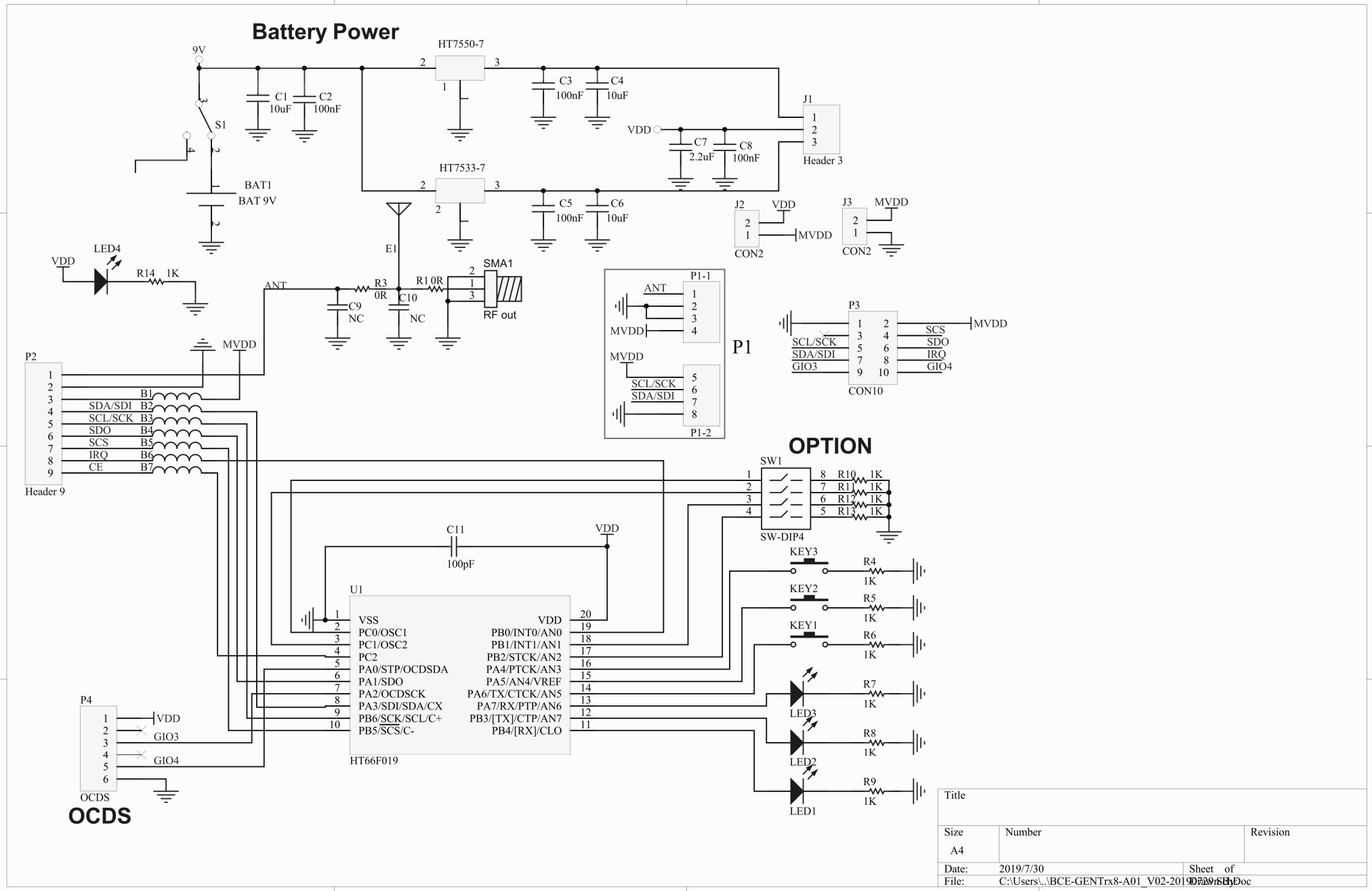
Battery Power
9V
S1
BAT1
BAT 9V
C1
10uF
C2
100nF
HT7550-7
HT7533-7
C3
100nF
C4
10uF
C5
100nF
C6
10uF
VDD
C7
2.2uF
C8
100nF
J1
Header 3
J2
CON2
J3
CON2
MVDD
LED4
R14 1K
ANT
R3
0R
R1 0R
C9
NC
C10
NC
E1
SMA1
RF out
P1-1
P1-2
P1
P3
CON10
SCL/SCK
SDA/SDI
GIO3
SCS
SDO
IRQ
GIO4
P2
Header 9
B1
B2
B3
B4
B5
B6
B7
CE
OPTION
SW1
SW-DIP4
R10 1K
R11 1K
R12 1K
R13 1K
C11
100pF
U1
HT66F019
VSS
PC0/OSC1
PC1/OSC2
PC2
PA0/STP/OCDSDA
PA1/SDO
PA2/OCDSCK
PA3/SDI/SDA/CX
PB6/SCK/SCL/C+
PB5/SCS/C-
PB0/INT0/AN0
PB1/INT1/AN1
PB2/STCK/AN2
PA4/PTCK/AN3
PA5/AN4/VREF
PA6/TX/CTCK/AN5
PA7/RX/PTP/AN6
PB3/[TX]/CTP/AN7
PB4/[RX]/CLO
KEY3
KEY2
KEY1
R4 1K
R5 1K
R6 1K
R7 1K
R8 1K
R9 1K
LED3
LED2
LED1
P4
OCDS
OCDS
Title
Size
A4
Number
Revision
Date: 2019/7/30
Sheet of
File: C:\Users\...\BCE-GENTrx8-A01_V02-2019-07-30.SchDoc
Drawn By: