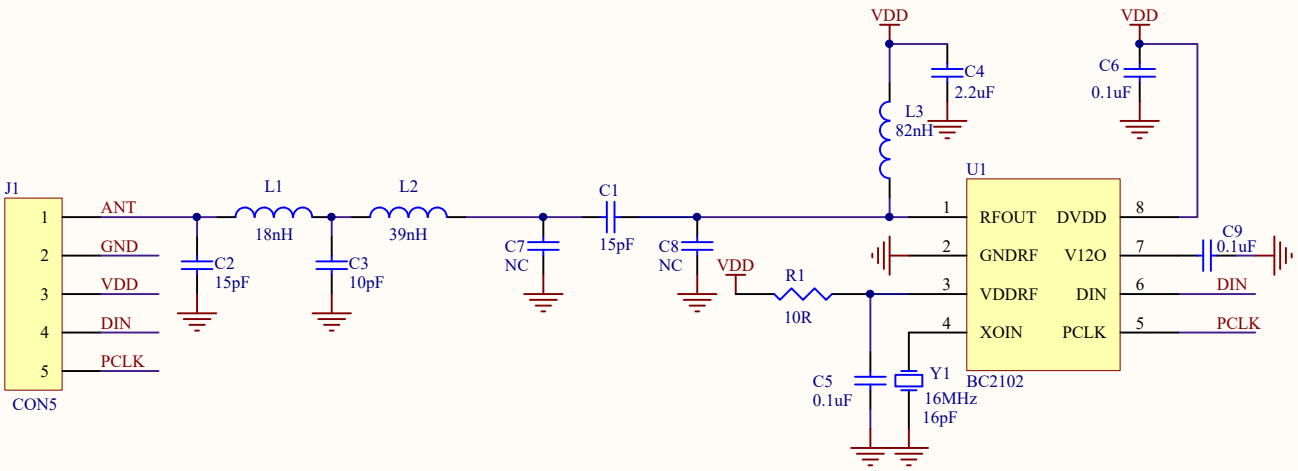

Title			
Size A4	Number		Revision
Date: 2022/10/22		Sheet of	
File: C:\Users\..\20200805-BCM-2102-X10 433MHz原理圖.SchDoc			