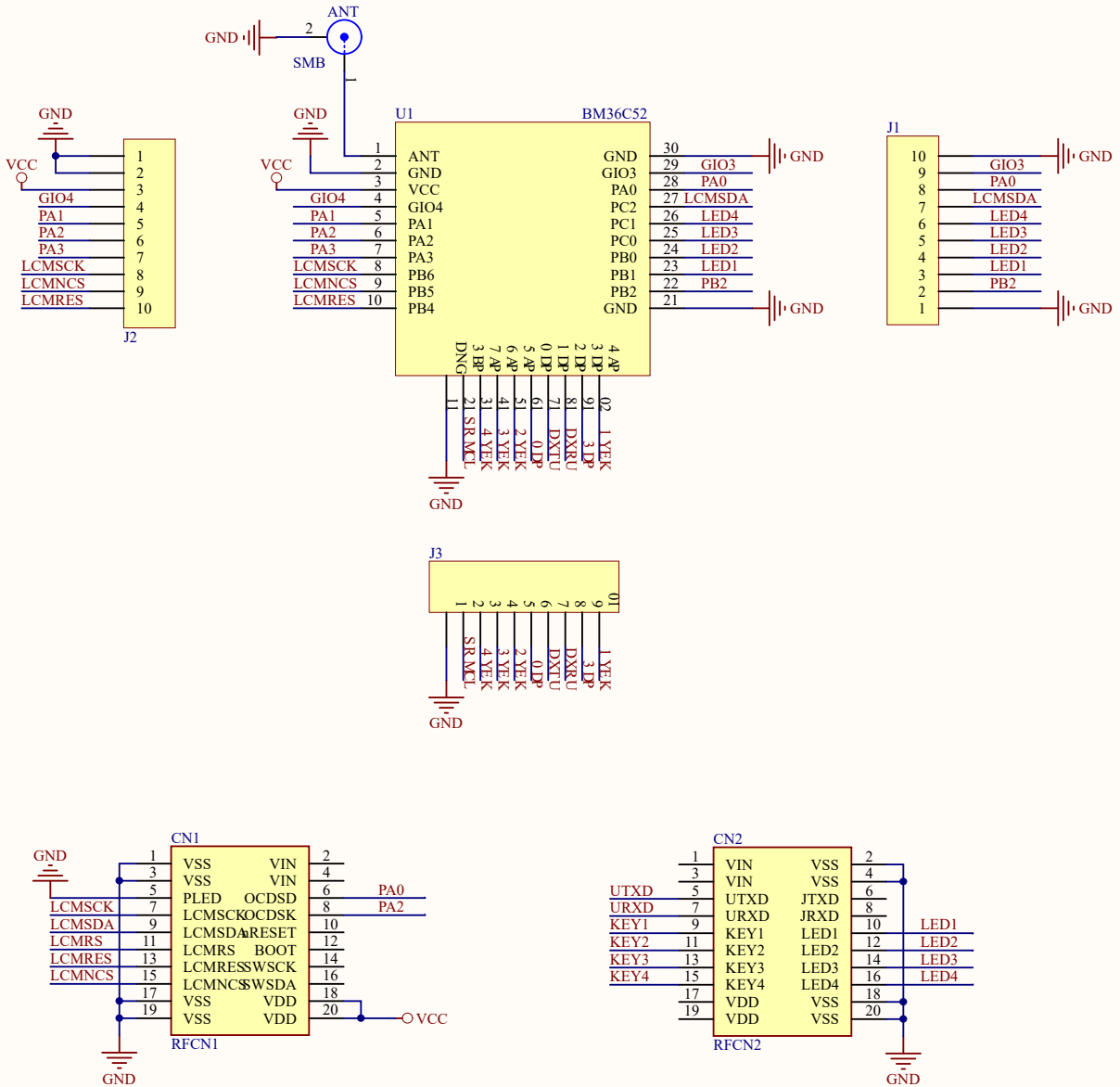

Title		
Size A4	Number	Revision
Date: 2020/4/28		Sheet of
File: C:\Users\..\BCT-3652-001.SchDoc		Drawn By: