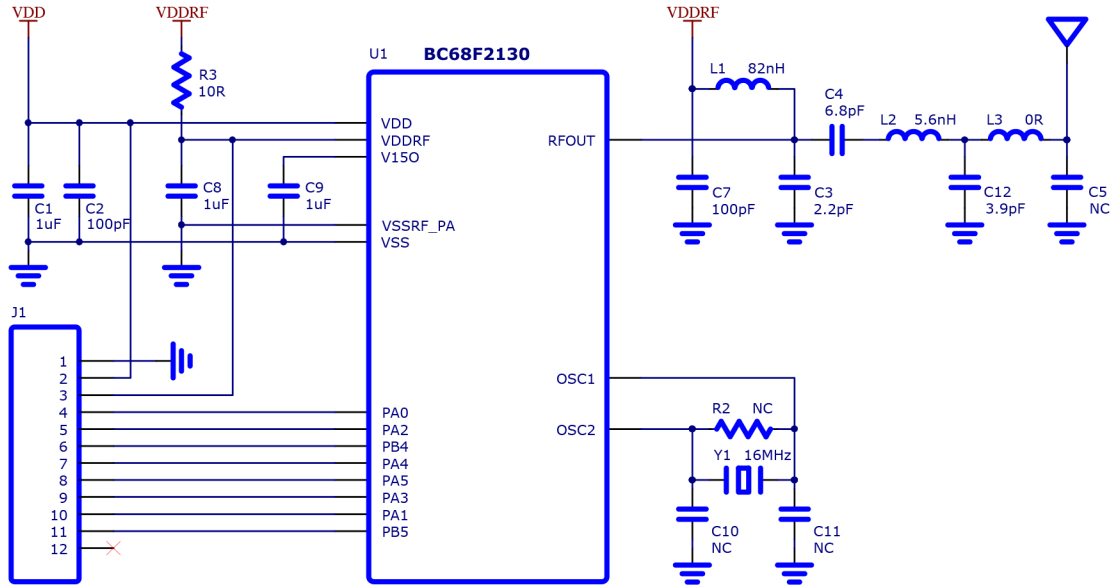
VDD
VDDRF
R3
10R
U1
BC68F2130
VDD
VDDRF
V15O
VSSRF_PA
VSS
RFOUT
OSC1
OSC2
PA0
PA2
PB4
PA4
PA5
PA3
PA1
PB5
C1
1uF
C2
100pF
C8
1uF
C9
1uF
J1
1
2
3
4
5
6
7
8
9
10
11
12
VDDRF
L1 82nH
C4
6.8pF
L2 5.6nH
L3 0R
C7
100pF
C3
2.2pF
C12
3.9pF
C5
NC
R2 NC
Y1 16MHz
C10
NC
C11
NC