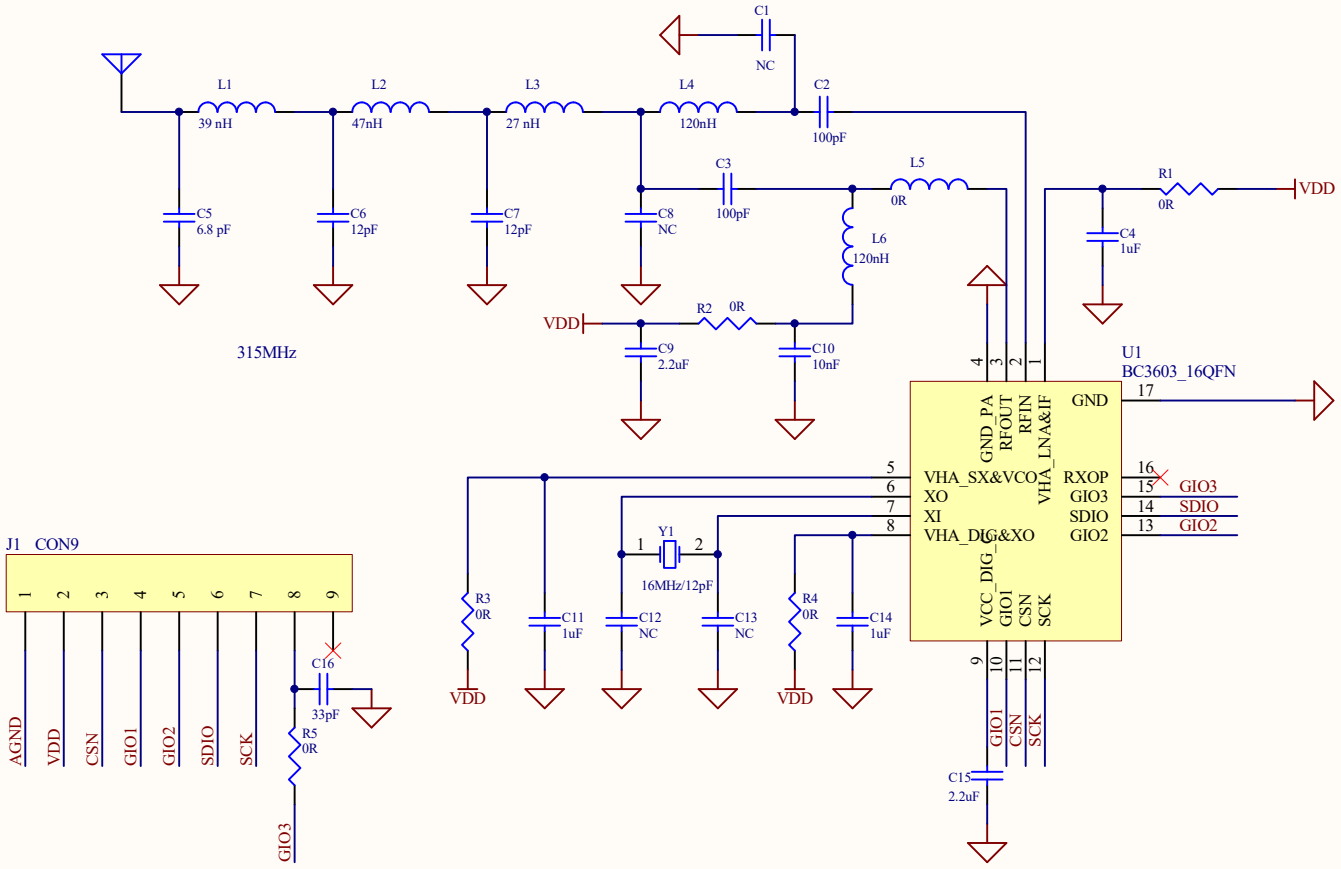

Title		
Size A4	Number	Revision
Date: 2023/11/7		Sheet of
File: \\..\BM3603-03-1 20230424.SchDoc		Drawn By: