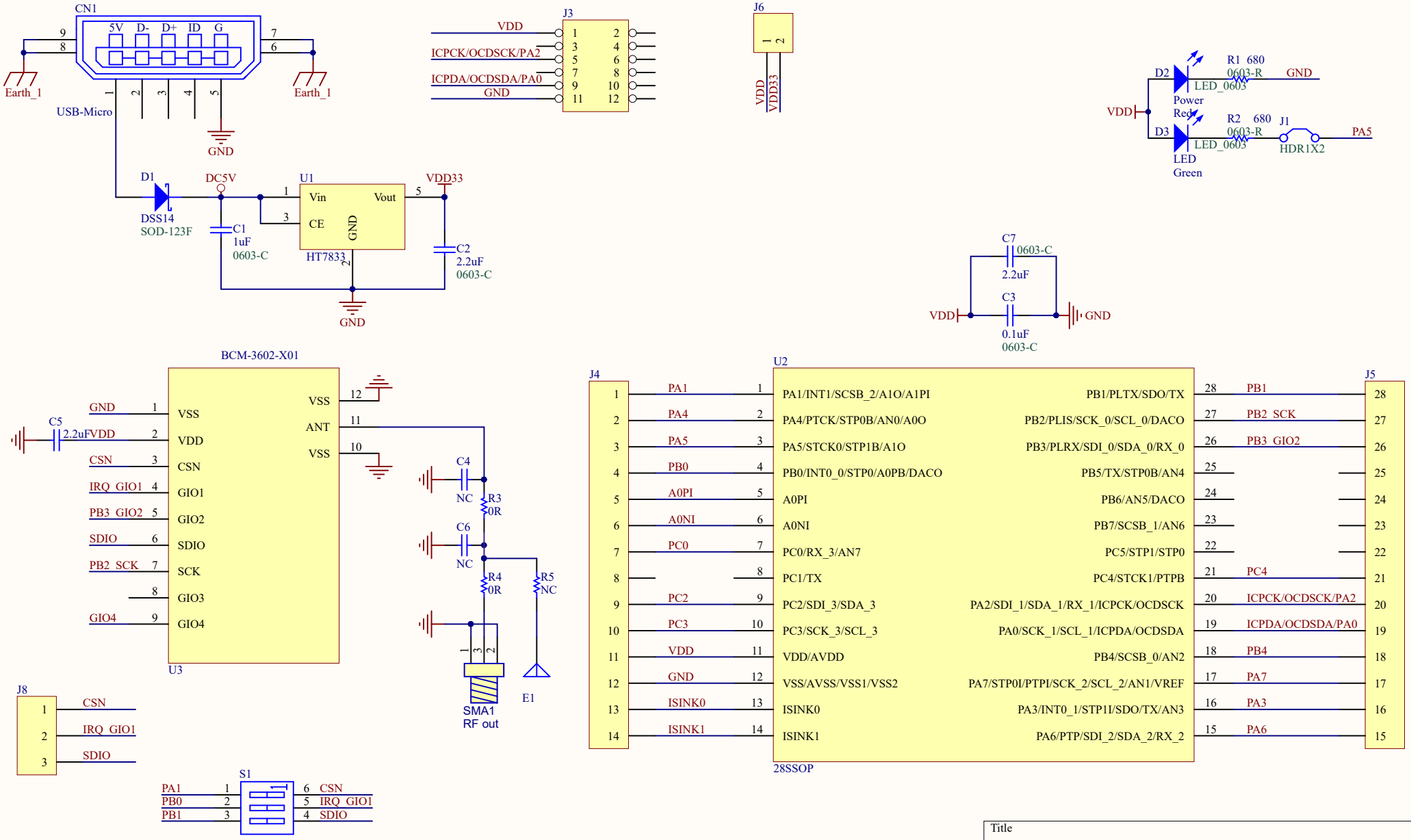

Title		
Size A4	Number	Revision
Date: 2025/11/24		Sheet of
File: D:\Work\..\DEV-BA45F5650.SchDoc		Drawn By: