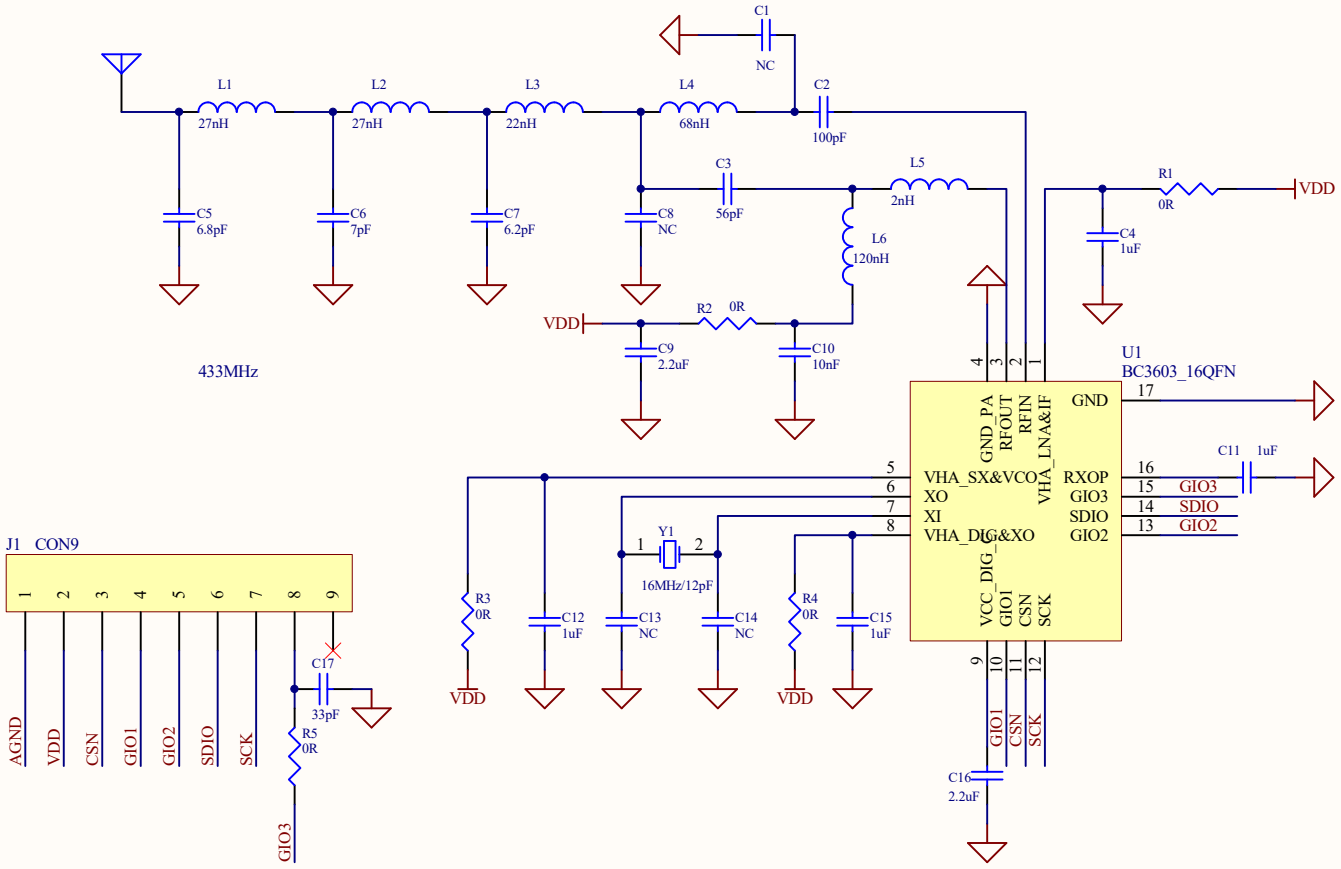

Title		
Size A4	Number	Revision
Date: 2023/3/9	Sheet of	
File: D:\03 WAN\..\BM3603-04-1 (433M)2022092...	Drawn By:	