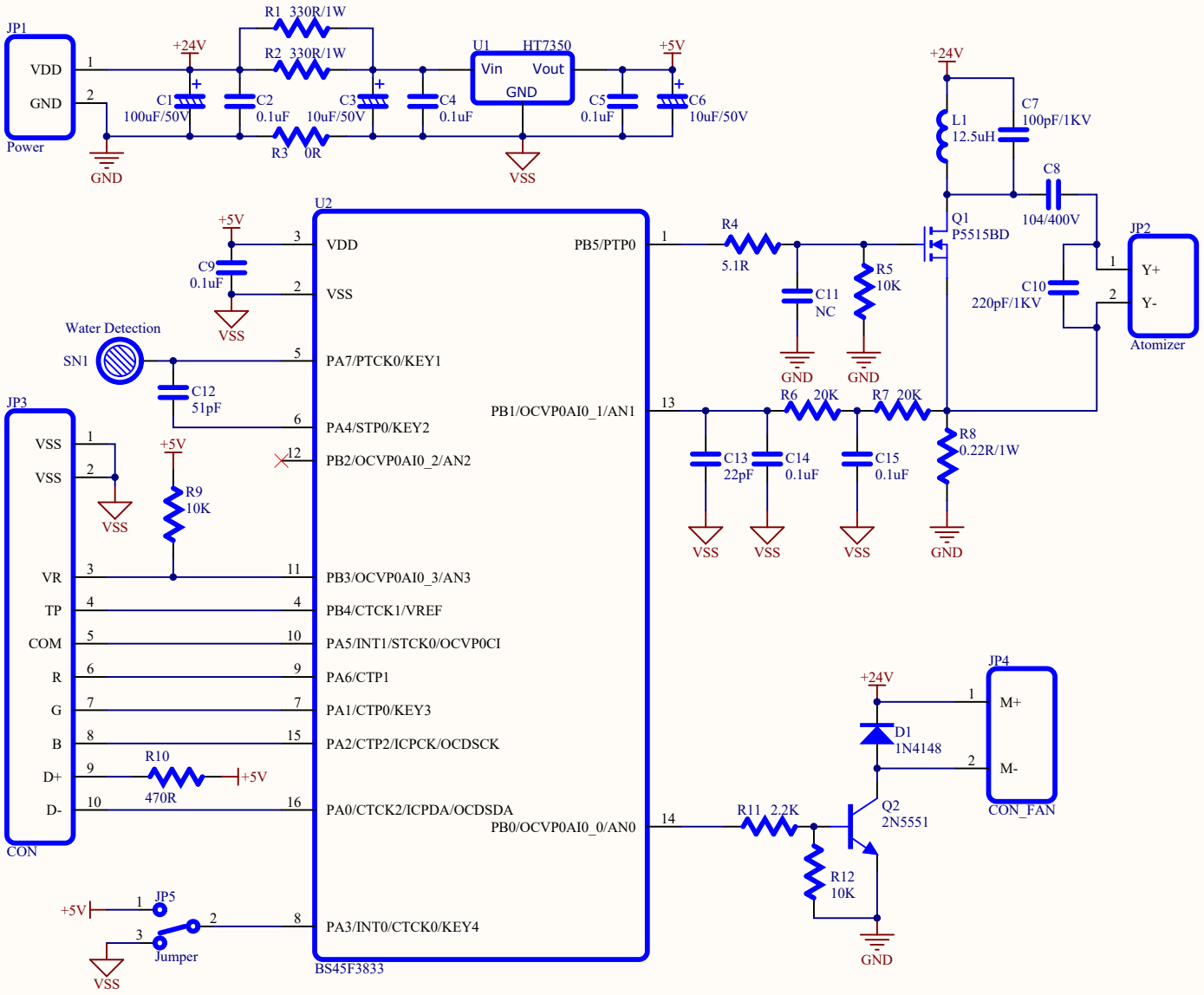

Title		
Size A4	Number	Revision
Date: 2019/7/4/		Sheet of
File: C:\Users\..\Atomizer.SchDoc		Drawn By: