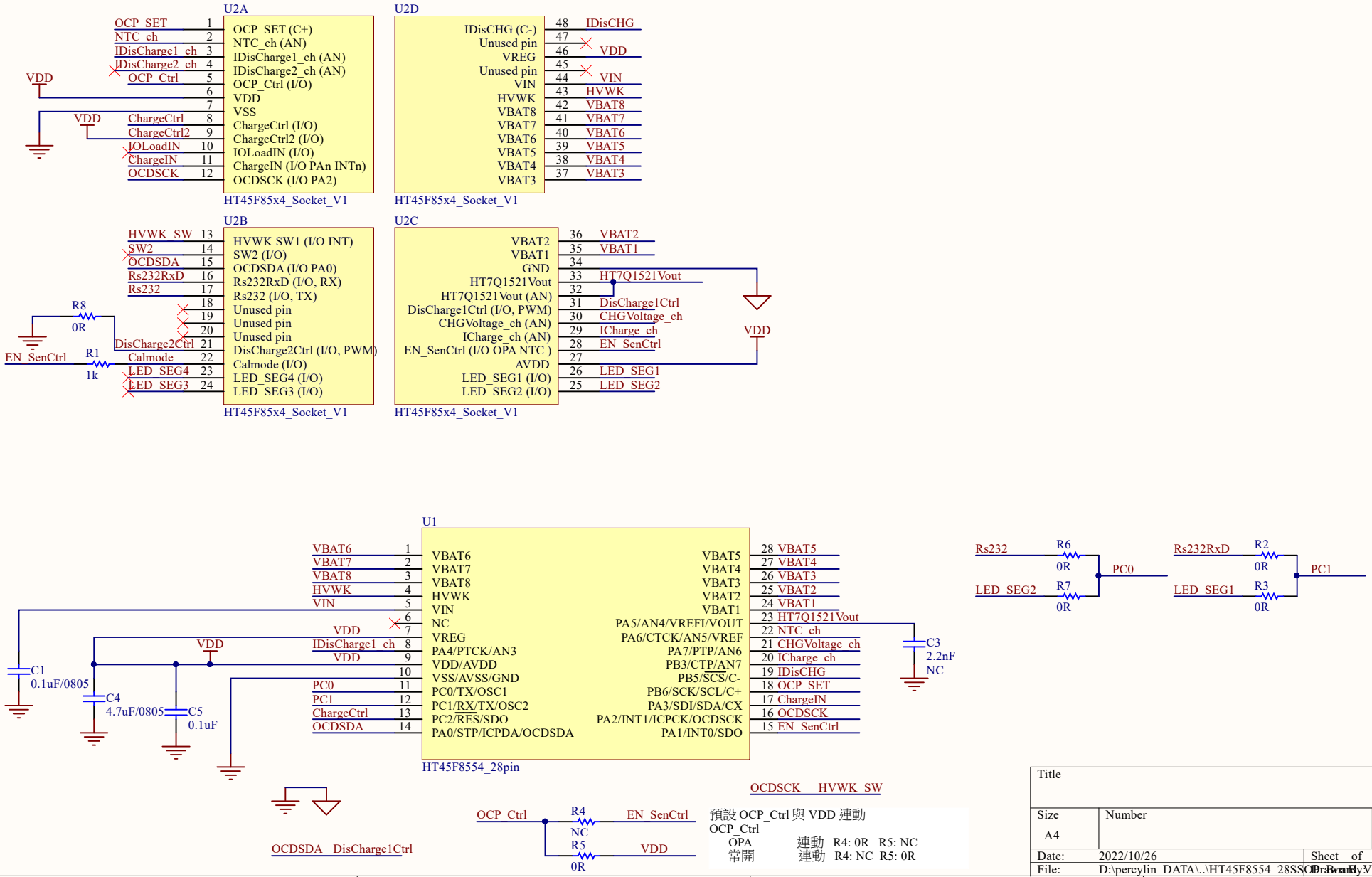
U2A
OCP_SET (C+)
NTC_ch (AN)
IDisCharge1_ch (AN)
IDisCharge2_ch (AN)
OCP_Ctrl (I/O)
VDD
VSS
ChargeCtrl (I/O)
ChargeCtrl2 (I/O)
IOLoadIN (I/O)
ChargeIN (I/O PAn INTn)
OCDSCK (I/O PA2)
HT45F85x4_Socket_V1
U2D
IDisCHG (C-)
Unused pin
VREG
Unused pin
VIN
HVWK
VBAT8
VBAT7
VBAT6
VBAT5
VBAT4
VBAT3
HT45F85x4_Socket_V1
U2B
HVWK SW1 (I/O INT)
SW2 (I/O)
OCDSDA (I/O PA0)
Rs232RxD (I/O, RX)
Rs232 (I/O, TX)
Unused pin
Unused pin
Unused pin
DisCharge2Ctrl (I/O, PWM)
Calmode (I/O)
LED_SEG4 (I/O)
LED_SEG3 (I/O)
HT45F85x4_Socket_V1
U2C
VBAT2
VBAT1
GND
HT7Q1521Vout
HT7Q1521Vout (AN)
DisCharge1Ctrl (I/O, PWM)
CHGVoltage_ch (AN)
ICharge_ch (AN)
EN_SenCtrl (I/O OPA NTC)
AVDD
LED_SEG1 (I/O)
LED_SEG2 (I/O)
HT45F85x4_Socket_V1
U1
VBAT6
VBAT7
VBAT8
HVWK
VIN
NC
VREG
PA4/PTCK/AN3
VDD/AVDD
VSS/AVSS/GND
PC0/TX/OSC1
PC1/RX/TX/OSC2
PC2/RES/SDO
PA0/STP/ICPDA/OCDSDA
PA5/AN4/VREFI/VOUT
PA6/CTCK/AN5/VREF
PA7/PTP/AN6
PB3/CTP/AN7
PB5/SCS/C-
PB6/SCK/SCL/C+
PA3/SDI/SDA/CX
PA2/INT1/ICPCK/OCDSCK
PA1/INT0/SDO
HT45F8554_28pin
OCP_SET
NTC_ch
IDisCharge1_ch
IDisCharge2_ch
OCP_Ctrl
ChargeCtrl
ChargeCtrl2
IOLoadIN
ChargeIN
OCDSCK
HVWK_SW
SW2
OCDSDA
Rs232RxD
Rs232
DisCharge2Ctrl
Calmode
LED_SEG4
LED_SEG3
EN_SenCtrl
DisCharge1Ctrl
CHGVoltage_ch
ICharge_ch
LED_SEG1
LED_SEG2
IDisCHG
VIN
R8 0R
R1 1k
C1 0.1uF/0805
C4 4.7uF/0805
C5 0.1uF
C3 2.2nF NC
R6 0R
R7 0R
PC0
R2 0R
R3 0R
PC1
R4 NC
R5 0R
預設 OCP_Ctrl 與 VDD 連動
OCP_Ctrl
OPA 連動 R4: 0R R5: NC
常開 連動 R4: NC R5: 0R
Title
Size A4
Number
Revision
Date: 2022/10/26
Sheet of
File: D:\percylin_DATA\..\HT45F8554_28SSOP_BoardV101.schdoc
Drawn By: