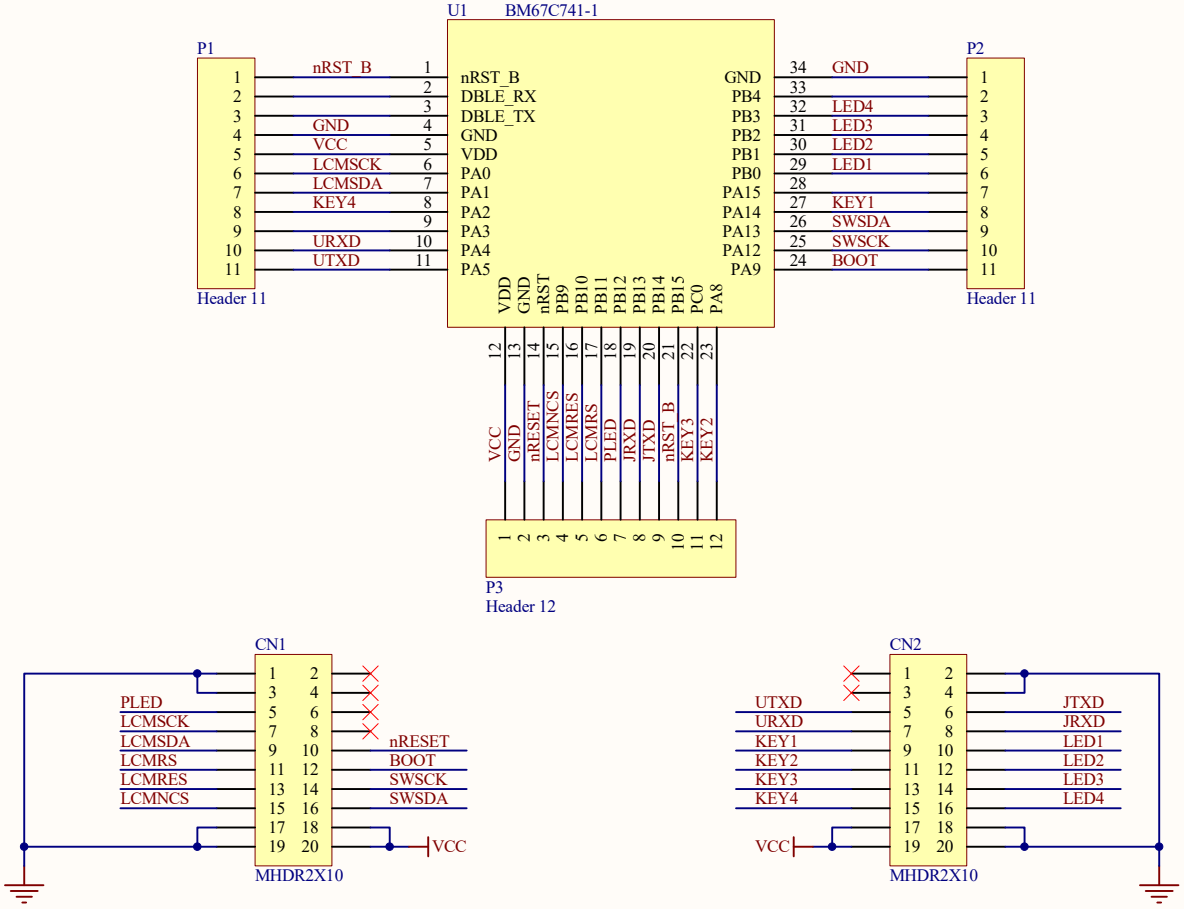

Title		
Size A4	Number	Revision
Date: 2022/12/8	Sheet of	
File: D:\qq&wechart\..\BCT-67C741-001_2022	Drawn By:	